DN mm	L mm		H mm	W mm	O		C		g		f	T	n-d	
	F4	F5			1.0	1.6	1.0	1.6	1.0	1.6			1.0	1.6
40	140	240	184	160	150		110		84		3	18	4-19	
50	150	250	195	160	165		125		99		3	19	4-19	
65	170	270	222	200	185		145		119		3	19	4-19	
80	180	280	251	200	200		160		133		3	19	8-19	
100	190	300	282	200	220		180		154		3	19	8-19	
125	200	325	340	250	250		210		184		3	19	8-19	
150	210	350	379	250	285		240		210		3	19	8-23	
200	230	400	461	320	340		295		265		3	20	8-23	12-23
250	250	450	559	370	405		350	355	319		3	22	12-23	12-28
300	270	500	639	370	460		400	410	370		4	24.5	12-23	12-28
350	290	550	762	450	520		460	470	429		4	26.5	16-23	16-28
400	310	600	836	450	580		515	525	480		4	28	16-28	16-31
450	330	650	957	640	615	640	565	585	530	548	4	30	20-28	20-31
500	350	700	1036	640	670	715	620	650	582	609	4	31.5	20-28	20-34
600	390	800	1188	640	780	840	725	770	682	720	5	36	20-31	20-37

CONFORM CU ORIGINALUL

SC PETROUZINEX SRL PIATRA NEAMȚ ROMÂNIA

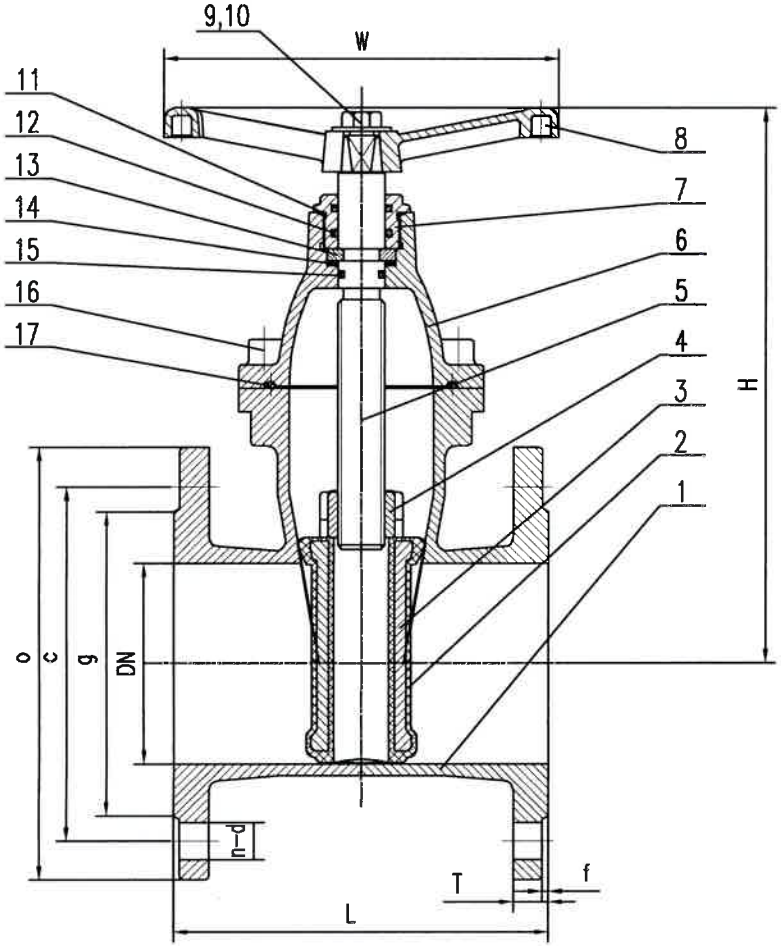

Ttem	Number	Part name	QTY	Material	Remark
17	ZF-100-12	Spacer	1	EPDM	
16	GB/T70-1985	Hexagon headbolt	4	SS	
15	ZF-100-14	Bonnet ring	1	EPDM	
14	ZF-100-13	PTFE pad	1	F4	
13	ZF-100-11	Clasp	1	BRASS	
12	ZF-100-10	O-ring	2	EPDM	
11	ZF-100-9	O-ring	1	EPDM	
10	GB2587-85	Flat washer	1	SS	
9	GB5780-86	Hexagon headbolt	1	SS	
8	ZF-100-8	Handwheel	1	GGG50	
7	ZF-100-7	Gland	1	BRASS	
6	ZF-100-6	Bonnet	1	GGG50	
5	ZF-100-5	Stem	1	SS420	
4	ZF-100-4	Stem nut	1	BRASS	
3	ZF-100-3	Skeleton	1	GGG50	
2	ZF-100-2	Disc	1	EPDM	
1	ZF-100-1	Body	1	GGG50	

Design		DN40-DN600		DIN 3352 Non-rising stem resilient seated Gate valve
Drawing				
Verifly				
Approue		Total 1 Page	No 1 Page	

DN mm	L mm		H mm	W mm	D		C		g		f	T	n-d	
	F4	F5			1.0	1.6	1.0	1.6	1.0	1.6			1.0	1.6
40	140	240	184	160	150		110		84		3	18	4-19	
50	150	250	195	160	165		125		99		3	19	4-19	
65	170	270	222	200	185		145		119		3	19	4-19	
80	180	280	251	200	200		160		133		3	19	8-19	
100	190	300	282	200	220		180		154		3	19	8-19	
125	200	325	340	250	250		210		184		3	19	8-19	
150	210	350	379	250	285		240		210		3	19	8-23	
200	230	400	461	320	340		295		265		3	20	8-23	12-23
250	250	450	559	370	405		350	355	319		3	22	12-23	12-28
300	270	500	639	370	460		400	410	370		4	24.5	12-23	12-28
350	290	550	762	450	520		460	470	429		4	26.5	16-23	16-28
400	310	600	836	450	580		515	525	480		4	28	16-28	16-31
450	330	650	957	640	615	640	565	585	530	548	4	30	20-28	20-31
500	350	700	1036	640	670	715	620	650	582	609	4	31.5	20-28	20-34
600	390	800	1188	640	780	840	725	770	682	720	5	36	20-31	20-37

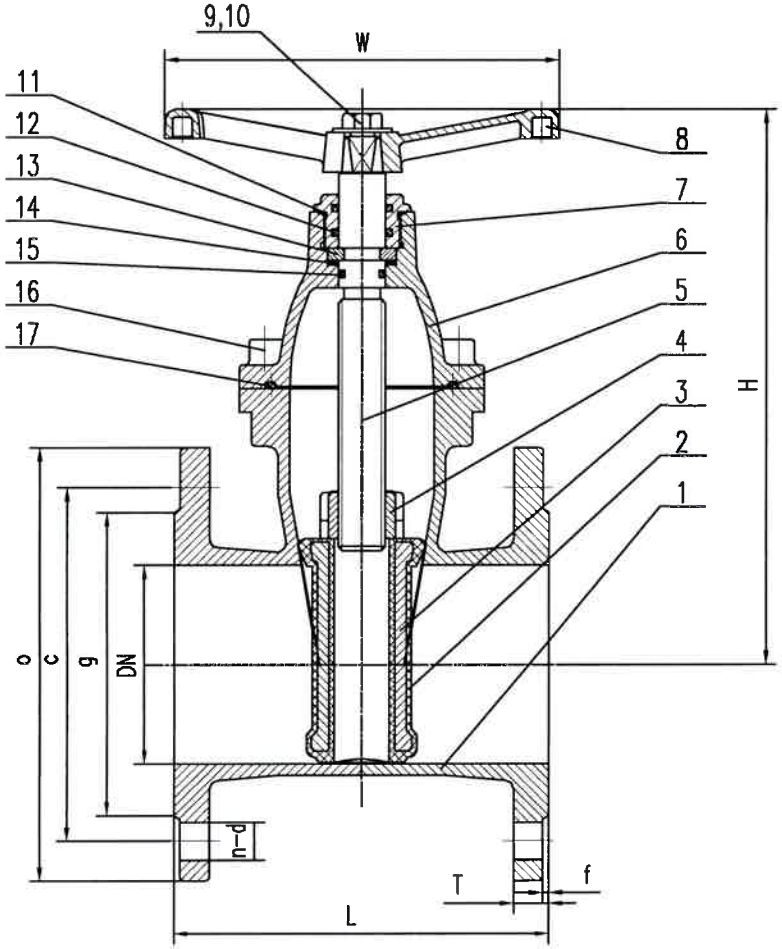

Art	Numar	Componenta	buc	Material	Observatii
17	ZF-100-12	Distantier	1	EPDM	
16	GB/T70-1985	Cap surub hexagonal	4	INOX	
15	ZF-100-14	Inel capac	1	EPDM	
14	ZF-100-13	Bucsa PTFE	1	F4	
13	ZF-100-11	Clema	1	ALAMA	
12	ZF-100-10	O-ring	2	EPDM	
11	ZF-100-9	O-ring	1	EPDM	
10	GB2587-85	Saiba plata	1	INOX	
9	GB5780-86	Cap surub hexagonal	1	INOX	
8	ZF-100-8	Roata de manevra	1	GGG50	
7	ZF-100-7	Presetupa	1	ALAMA	
6	ZF-100-6	Capac	1	GGG50	
5	ZF-100-5	Tija	1	INOX 420	
4	ZF-100-4	Piulita tija	1	ALAMA	
3	ZF-100-3	Sertar	1	GGG50	
2	ZF-100-2	Etansare sertar	1	EPDM	
1	ZF-100-1	Corp	1	GGG50	

Design		DN40-DN600		DIN 3352 ROBINET SERTAR CAUCIUCAT CU TIJA NEASCENDETA
Drawing				
Verifly				
Approue		Total 1 Page	No 1 Page	

ROMANIA S.C. PETROCUZINEX S.R.L. PATRA